Raptor Series

Your satisfaction is important to us, please let us help!

If you have any questions or concerns during the installation, our support representatives are available to assist you.
Please call: 1-877-769-3765 or Live Chat at www.raptorseries.com
If you have damaged or missing parts please contact the company you purchased the product from and notify them of the issue right away.

CAUTION: Do not install damaged parts!!!

Raptor Series

Easy Return / Easy Exchange

Want to return an item or exchange? Not satisfied with purchase?
No problem. We strongly believe in service after the sale and we stand behind our products and our service to you, our valued customer. There is no problem we can't solve for you!

Items that have been installed and/or damaged after receipt, are no longer in new and ready-to-sell condition and cannot be refunded, replaced or exchanged unless it has a manufacturer defect or was damaged in shipping. In addition, we cannot accept return on items that are not in the original packaging. Items returned in poor condition or having parts missing will not be credited.

Please note: Your request for return or replacement must be initiated within 30 days of delivery of your merchandise.

Did your order arrive damaged?
Please do not install damaged products. Contact the company you purchased your product from as soon as possible and notify them of the damages. They will make arrangements with you to assist with the problem.

Did you order the wrong part or receive the wrong item?
Don't worry. From time to time human error can result in problems with ordering or shipping. Contact the company you purchased your product from as soon as you notice the error. Every company has their own policy on returning parts that have been ordered incorrectly or shipped incorrectly.

In the event that you need to ship your part back to return/exchange, please ship to the warehouse below:

CYC Returns Warehouse
2415 Cathy Lane
Jasper, IN 47546

Raptor Series Warranty

LIMITED TEN (10) YEAR WARRANTY

For Powder Coated Steel Products

CYC Engineering, Inc. guarantees the original purchaser of our products a limited ten (10) year warranty from the date of original purchase against manufacturer defects in materials, workmanship and finish under normal use. The step pads are covered under warranty for 1 year. This warranty does not include damage resulting from road hazards such as gravel or other debris, product misuse, improper installation, impairments from accidents, product modifications, product neglect or scratches during the life of the product. This limited ten year warranty applies only to new products and is limited to the repair or replacement of company's products. Warranty does not include costs of removal, installation, labor, inconvenience or consequential damages. Original purchaser must return defective merchandise along with the purchase receipt, to the original place of purchase.

LIMITED LIFETIME WARRANTY

For Stainless Steel Products

CYC Engineering, Inc. guarantees the original purchaser of our products a limited lifetime warranty from the date of original purchase against manufacturer defects in materials, workmanship and finish under normal use. The step pads are covered under warranty for 1 year. This warranty does not include damage resulting from road hazards such as gravel or other debris, product misuse, improper installation, impairments from accidents, product modifications, product neglect or scratches during the life of the product. This limited lifetime warranty applies only to new products and is limited to the repair or replacement of company's products. Warranty does not include costs of removal, installation, labor, inconvenience or consequential damages. Original purchaser must return defective merchandise along with the purchase receipt, to the original place of purchase.

1504-0304, 1504-0304B

4" OVAL BAR CURVED

Raptor Series

Components:

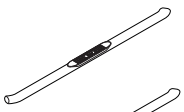

Driver Side
Step Bar
Qty 1

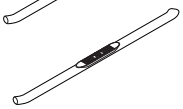

Passenger Side
Step Bar
Qty 1

Driver's Side
Bracket
Qty 3

Passenger Side
Bracket
Qty 3

Rubber
Gasket
Qty 6

Hardware:

M8M x 30MM
Hex Head Bolt
Qty 10

M8 Lock
Washer
Qty 10

M8 Flat
Washer
Qty 10

M10 Flat
Washers
Qty 12

M10 x 30MM
Button Head
Bolts
Qty 12

M10 Lock
Washers
Qty 12

Tools Required:

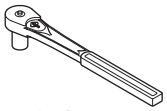

RATCHET

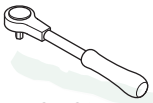

TORQUE
WRENCH

14MM SOCKET

6MM HEX BIT

Torque Specifications:

For Rocker Panel Mount Installations
M8 through M12 bolts and nuts are set to 15-20 ft lbs.

Note: When installing the brackets and bars, all hardware must be left loose until all the items are attached.

1. Remove all contents from the package and check stainless steel tubes for any damage. Also, verify that all components and hardware listed above are included before you begin installation.

2. Read installation manual and installation drawing completely. Understand all brackets and bolts before installation.

3. Begin installation on the passenger side. Align **Brackets** as shown.

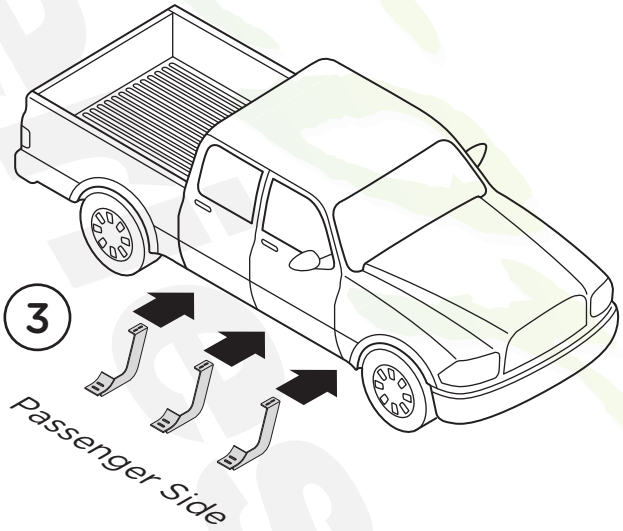

4. All passenger side Brackets are identical with the bracket cradle facing toward the rear of the vehicle. Install the first passenger side Bracket closest to the front wheel. Align with existing factory holes in the rocker panel as shown (4a), Secure the first Bracket using one (1) M8 x 30mm Hex Bolt, one (1) M8 Lock Washer and one (1) M8 Flat Washer (4b).

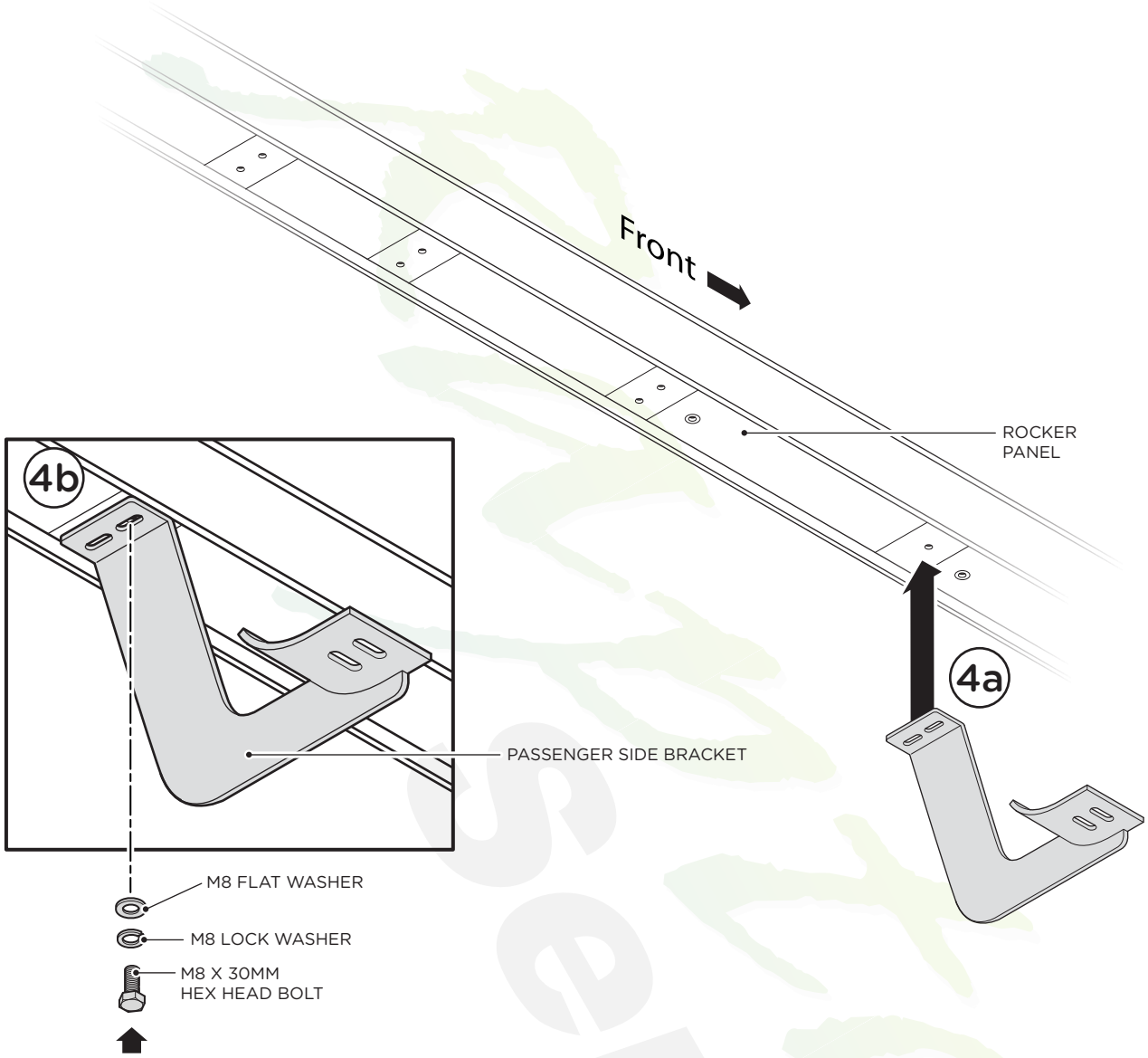

5. Position the remaining two (2) passenger side Brackets as shown (5a) and secure using two (2) M8 x 30mm Hex Bolts, two (2) M8 Lock Washers and two (2) M8 Flat Washers per Bracket (5b).

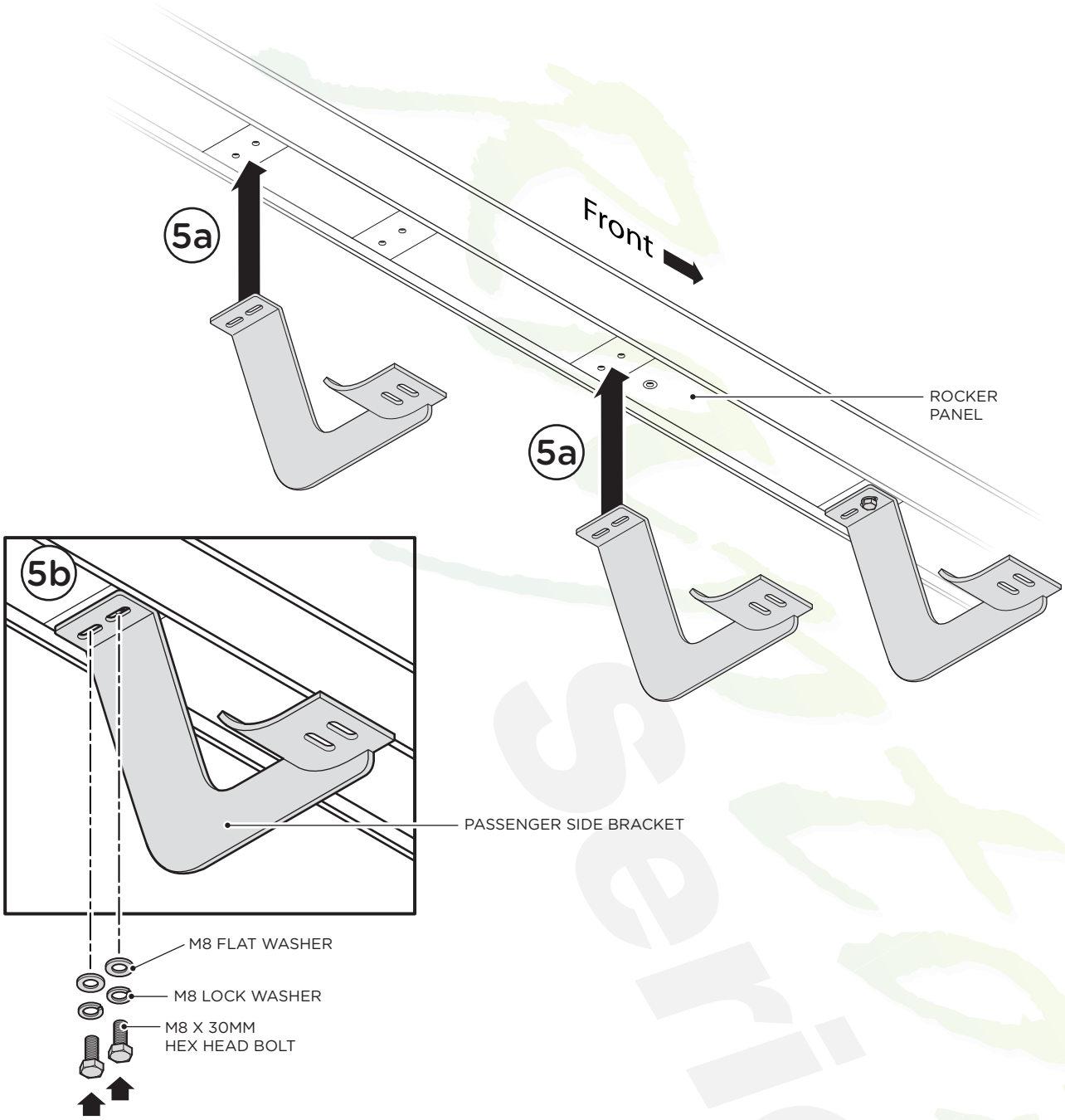

6. Place the Rubber Gaskets onto the Brackets. Then, place the Step Bar onto the Brackets. Each Step Bar is marked Driver and Passenger.

7. Secure the Step Bar to each Bracket using two (2) M10 x 30MM Button Head Bolts and two (2) M10 Lock Washers and two (2) M10 Flat Washers per bracket.

Tighten until the split lock washer is flat against bracket and snug. DO NOT over tighten and strip the threaded insert in the tube.
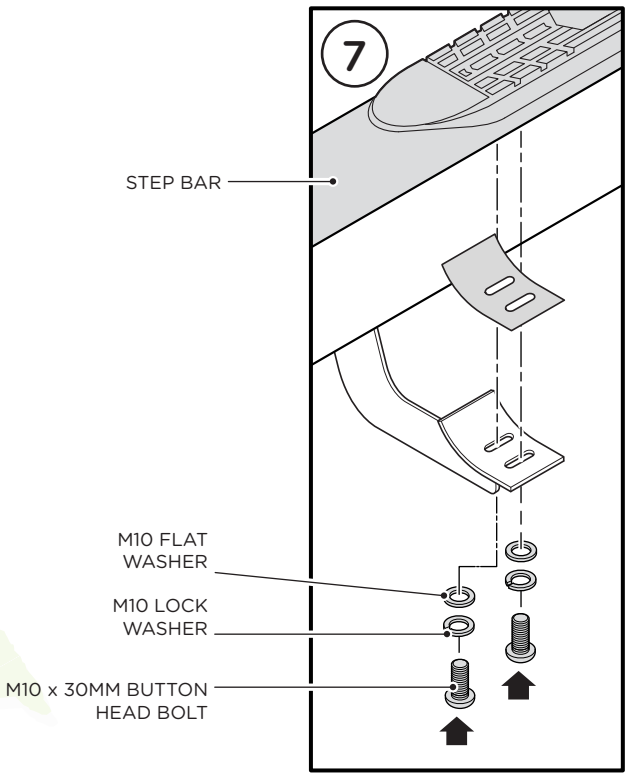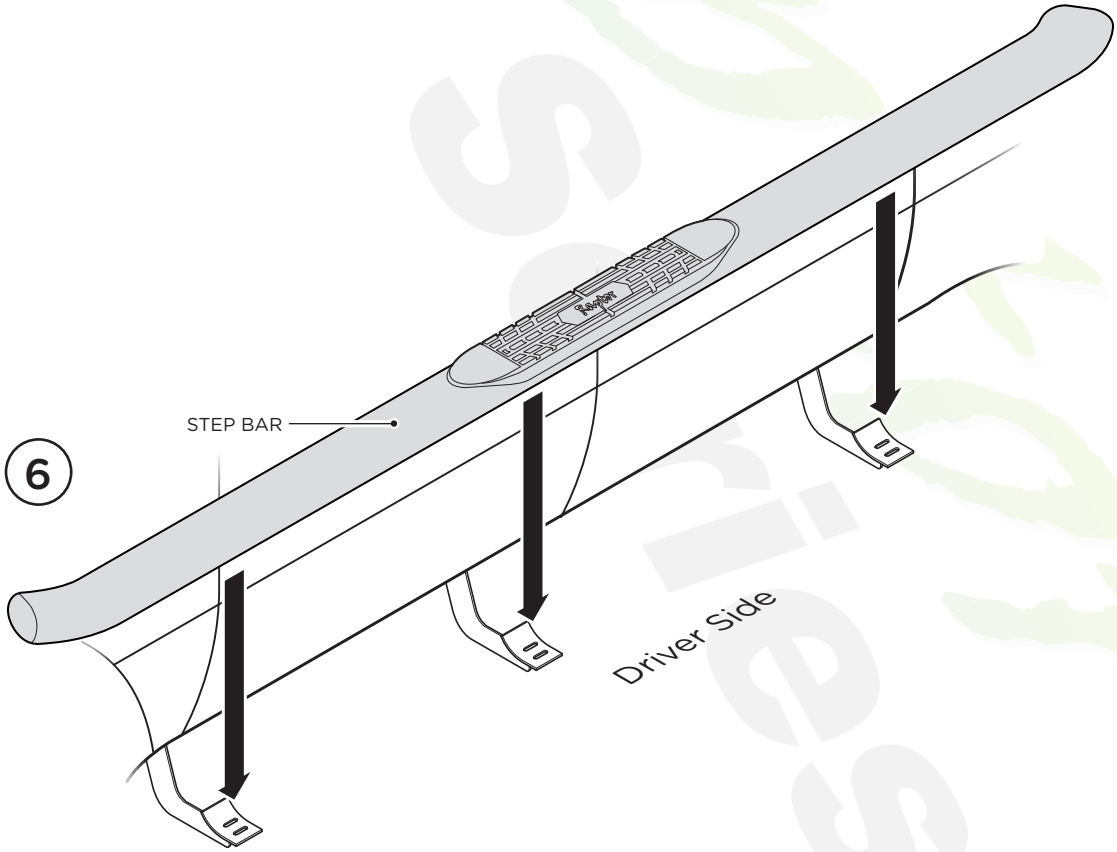
Repeat these steps for passenger side installation. When all hardware is in place, everything must be tightened. See Page 1 for Torque Specifications.