Aluminess Products Inc
Info@Aluminess.com
619-449-9930

NERF BAR INSTALLATION INSTRUCTIONS
2007-2020 Sprinter

Please read before beginning

- *Stainless steel hardware may bind together when tightening—It is recommended that you apply an anti-seize assembly lubricant to the threads of each bolt before assembly*
- *This installation requires two people*

Required tools

- *Drill and drill bits (1/4", 5/16", 3/8")*
- *Standard wrench set*
- *Center punch or scribing tool*
- *Leveling tool*
- *C-clamps*

Included Hardware

Standard Nerf Bars	Quantity
70008 - 1/4-20 Nylock Nuts SS	12
70009 - 1/4 x 5/8 Washer SS (.03" Thick)	24
70060 - 1/4-20 x 1" Button Head Bolt, SS	12
70019 – 5/16-18 Nylock Nut, SS	4
70020 – 5/16" Flat Washer	8
70022 – 5/16-18 x 1" Hex Head Bolt, SS	4
70231 – Self Tapping, SS #14 x 1 1/2" Bolt	8
Antiseize Packet, 2g	1

Nerf Bars with Treadplate Step	Quantity
70008 - 1/4-20 Nylock Nuts SS	16
70009 - 1/4 x 5/8 Washer SS (.03" Thick)	32
70060 - 1/4-20 x 1" Bolt, Button Head, Socket Cap, SS,	16
70019 – 5/16-18 Nylock Nut, SS	4
70020 – 5/16" Flat Washer	8
70022 – 5/16-18 x 1" Hex Head Bolt, SS	4
70231 – Self Tapping, SS #14 x 1 1/2" Bolt	16
Antiseize Packet, 2g	1

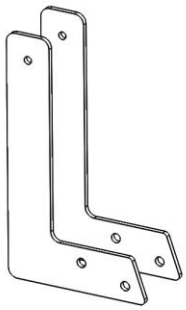

QTY 1 set
(2) Bolt-On Rear Blades

TREADPLATE NERF BARS ONLY

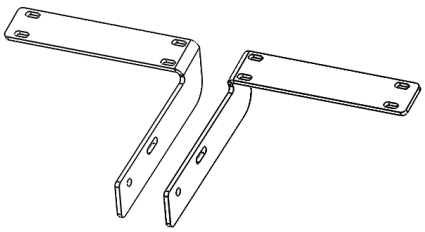

QTY 1 set
(2) Bolt-On Center Brackets
(1 Pass, 1 Driver)

Installation Instructions

1. Attach both bolt-on rear blades with 5/16” hardware as shown in ***Figure 1***.
    a. If you have treadplate nerf bars, you’ll also need to bolt on a middle bracket on both passenger and driver side with ¼” hardware, as shown in ***Figure 2***.

    NOTE: Only bolt together the top hole and slot at this point, and be sure to leave everything slightly loose so you can adjust positioning if necessary while installing.
2. Lie on your back and hold the nerf bar up against the underside of the van so that the flat mounting surface is up against the inside wall of the rocker panel of the van.
3. To help you locate the nerf bar, the rear bracket slides up against the body in the rear. The bracket will go up against the back side of the rear body brace ***(Figure 3)***
4. Using a clamp, fix the rear blade to the rear body brace.
5. On the front bracket hold the nerf bar up so the flat mounting surface is flat against the inside wall of the van; Use the self-tapping sheet metal screws to fasten the flat plate to the inside wall of the van (see **Figure 4b**). You should use 2 sheet metal screws per bracket. If you are having trouble getting it started you can drill a 3/16” Pilot hole first.
6. You will now through bolt the bracket to the pinch weld of the vehicle. Drill two holes through each bracket and into the pinch weld with a ¼” drill as shown in **Figure 4a and 4b**. You will want to be careful not to drill too high where you won’t be able to get the washer on the bolt, or too low where you don’t catch all of the pinch weld with the hole.
7. Bolt down through the bracket and the pinch weld using the ¼”x 1” bolts, two ¼” washers per bolt, and ¼” nylock nuts (reference **Figure 4a and 4b**)

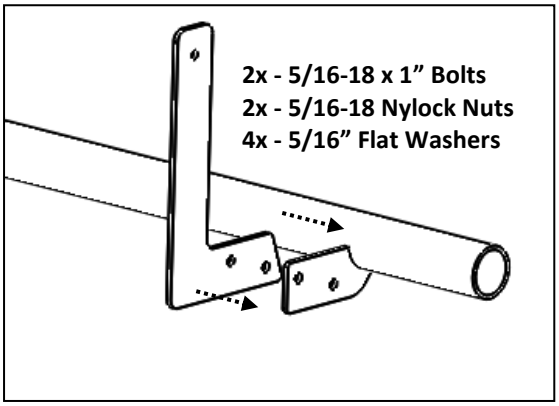

Figure 1. Bolt-on rear blades.

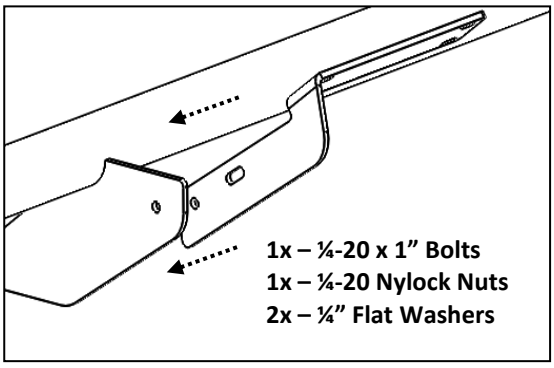

Figure 2. TREADPLATE NERF BARS ONLY Bolt-on center bracket for treadplate step.

Figure 3. (above) Rear blade against body of van.

Figure 4a and 4b. (below and bottom right) Front mounting brackets against pinch weld of van.

8. Remove the clamp on the rear blade and have your partner pull the nerf bar pipe away from the rocker panel so it aligns with the contour of the vehicle (***Figure 5***).
9. While holding the nerf bar aligned, drill a ¼" hole through the hole on the rear blade, into the rear body brace.
10. Bolt down through the rear blade and the rear body brace with a ¼"x 1" bolt, two ¼" washers, and ¼" nylock nut.
11. Drill a second hole through the rear bracket and rear body brace and bolt down through the bracket and the rear body brace with a ¼"x 1" bolt, two ¼" washers, and ¼" nylock nut.
12. If you have treadplate nerf bars continue to step 15. If not, be sure to double check that all bolts are tight and you're done!
13. Recheck all mounting points after 100 miles of driving for safety.

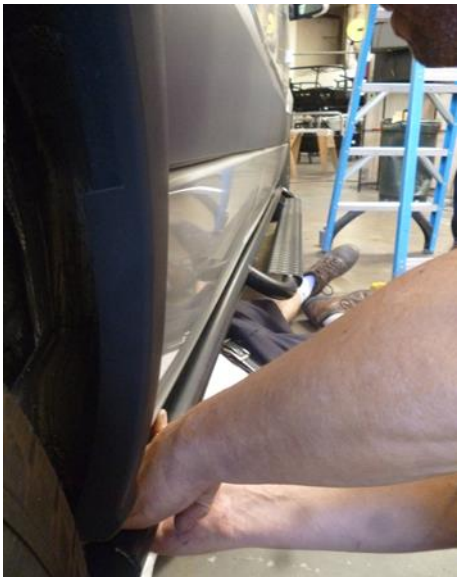

Figure 5. Pull nerf bar to align with van contour.

FOR TREADPLATE NERF BARS ONLY

14. Align the slots on the center step bracket with the underside of the front body brace and drill a self-tapping bolt into the angled underside of the van (***Figure 6***).
15. Repeat with the next 3 self-tappers on this same bracket.
16. Once this bracket it bolted firmly into the van, you can drill the second hole into the center nerf bar blade to lock the rotation permanently on this bracket (***See Figure 7***). Use a ¼" drill bit and bolt together using 1/4" hardware.
17. Double check that all mounting brackets are tight and you're done! Recheck all mounting points after 100 miles of driving for safety.

Figure 6. Center mounting bracket against front body brace.

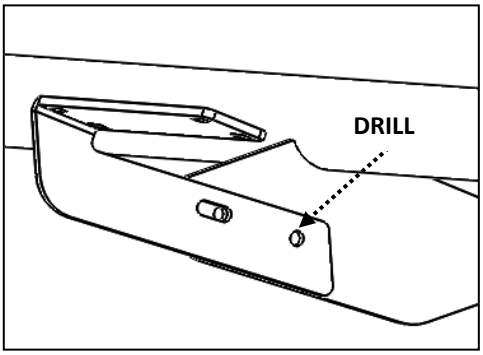

Figure 7. Drill 2nd hole on bracket and bolt together using 1/4" hardware.

Aluminess Products, Inc. (Aluminess) Warranty

1. Lifetime Warranty. Aluminess provides a lifetime warranty of its products to the original retail purchaser provided such products are installed correctly according to the official Aluminess installation instructions. Any modification to the original product design, function or use of any Aluminess products will void the Aluminess warranty. Aluminess will have sole discretion to determine warranty eligibility for any and all Aluminess products sold to any purchaser.

2. Limited Remedies. Subject to any limitations and exclusions described herein, and subject to Aluminess' determination of warranty eligibility, Aluminess will remedy defects in product materials and/or workmanship of any product by repairing or replacing such defective product, which shall be within Aluminess' sole discretion, without charge for parts or labor. Aluminess may elect in its sole discretion not to replace a defective product and issue the purchaser a refund equal to the purchase price of any defective product or purchaser may elect to receive a credit (equal to such refund) toward the purchase of new Aluminess products. Repair or replacement of a defective product or providing a refund or credit to purchaser will be purchaser's exclusive remedy under this warranty. Damage to a purchaser's vehicle, cargo and/or any other person or property is expressly excluded from the Aluminess warranty.

3. Modification. Aluminess products are designed to be mounted to factory equipped vehicles. Aftermarket additions to such vehicle may or may not require modification of an Aluminess product. The Aluminess warranty does not extend to any Aluminess products that are modified to fit around other otherwise accommodate or be compatible with any aftermarket vehicle accessories or alterations. Aluminess does not guarantee fitment with any other aftermarket accessories or modified vehicle, and it is up to purchaser to determine fitment prior to purchasing any Aluminess product.

4. Damage. Damage to Aluminess products due to normal wear and tear, including, but not limited to, cosmetic issues and superficial scratches, or structural damage to an Aluminess product in connection with any vehicle collisions or other structural degradation in connection with the use of such vehicle (on road or off road) will not be covered by the Aluminess warranty. Additionally, any product user's misuse, neglect, overloading, improper maintenance or improper installation or repair of any Aluminess products are not covered under the Aluminess warranty.

5. Use of the Products. Aluminess products are designed for off road vehicle use. Installing Aluminess products on a vehicle may exceed the factory designed capabilities of such vehicle and could potentially lead to vehicle damage. Aluminess will not be responsible for any damage caused to a purchaser or user's vehicle or any vehicle accessories caused by the use of any Aluminess products. It is to the sole responsibility of purchaser to inspect and ensure that the intended vehicle and Aluminess products are suitable and compatible for travel on road and off road. No seller nor any manufacturer of Aluminess products will be liable for any loss, damage or injury directly or indirectly arising from the use of any Aluminess products. Before using any Aluminess products, the purchaser or user will determine the suitability of the product(s) for their intended use(s) and the purchaser or user shall assume all responsibility and risk in connection therewith.

6. DISCLAIMER. THE ALUMINESS WARRANTY IS EXPRESSLY MADE IN LIEU OF ANY AND ALL OTHER WARRANTIES, AND EXCEPT FOR THE ALUMINESS WARRANTY SET FORTH HEREIN, ALUMINESS MAKES NO WARRANTY WHATSOEVER WITH RESPECT TO ANY ALUMINESS PRODUCT, INCLUDING ANY WARRANTY OF MERCHANTABILITY AND FITNESS FOR A PARTICULAR PURPOSE, WHETHER EXPRESS OR IMPLIED BY LAW, COURSE OF DEALING, COURSE OF PERFORMANCE, USAGE OF TRADE, OR OTHERWISE.

EXCEPT FOR PURCHASER'S LIMITED REMEDIES SET FORTH HEREIN, IN NO EVENT WILL ALUMINESS BE LIABLE FOR ANY LOST PROFITS, LOST SALES, OR FOR ANY CONSEQUENTIAL, DIRECT, INDIRECT, INCIDENTAL, SPECIAL, EXEMPLARY OR PUNITIVE DAMAGES OR FOR ANY OTHER DAMAGES OF ANY KIND OR NATURE.

7. Compliance. Aluminess cannot guarantee that its products comply with all Federal, State, and/or local laws. Purchaser is advised to review local vehicle codes for compatibility prior to purchase to ensure that the installation and use of any Aluminess products does not violate any applicable laws.

8. Warranty Claim Submission. Purchaser will responsible for returning any defective product to Aluminess for warranty consideration and purchaser may be responsible for all costs associated with shipping the product to and from Aluminess. Prior to returning any product for warranty, purchaser must contact Aluminess Products Inc. for proper authorization.